HD74LS174 / HD74LS175

Hex / Quadruple D-type Flip-Flops (with clear)

REJ03D0451–0300
Rev.3.00
Jul.15.2005

These positive-edge-triggered flip-flops utilize TTL circuitry to implement D-type flip-flop logic. All have a direct clear input, and the HD74LS175 features complementary outputs from each flip-flops. Information at the D inputs meeting the setup time requirements is transferred to the Q outputs on the positive-going edge of the clock pulse. Clock triggering occurs at a particular voltage level and is not directly related to the transition time of the positive-going pulse. When the clock input is at either the high or low level, the D input signal has no effect at the outputs.

Features

- Ordering Information

• HD74LS174

Part Name	Package Type	Package Code (Previous Code)	Package Abbreviation	Taping Abbreviation (Quantity)
HD74LS174P	DILP-16 pin	PRDP0016AE-B (DP-16FV)	P	—
HD74LS174FPEL	SOP-16 pin (JEITA)	PRSP0016DH-B (FP-16DAV)	FP	EL (2,000 pcs/reel)
HD74LS174RPEL	SOP-16 pin (JEDEC)	PRSP0016DG-A (FP-16DNV)	RP	EL (2,500 pcs/reel)

• HD74LS175

Part Name	Package Type	Package Code (Previous Code)	Package Abbreviation	Taping Abbreviation (Quantity)
HD74LS175P	DILP-16 pin	PRDP0016AE-B (DP-16FV)	P	—
HD74LS175FPEL	SOP-16 pin (JEITA)	PRSP0016DH-B (FP-16DAV)	FP	EL (2,000 pcs/reel)
HD74LS175RPEL	SOP-16 pin (JEDEC)	PRSP0016DG-A (FP-16DNV)	RP	EL (2,500 pcs/reel)

Note: Please consult the sales office for the above package availability.

Pin Arrangement

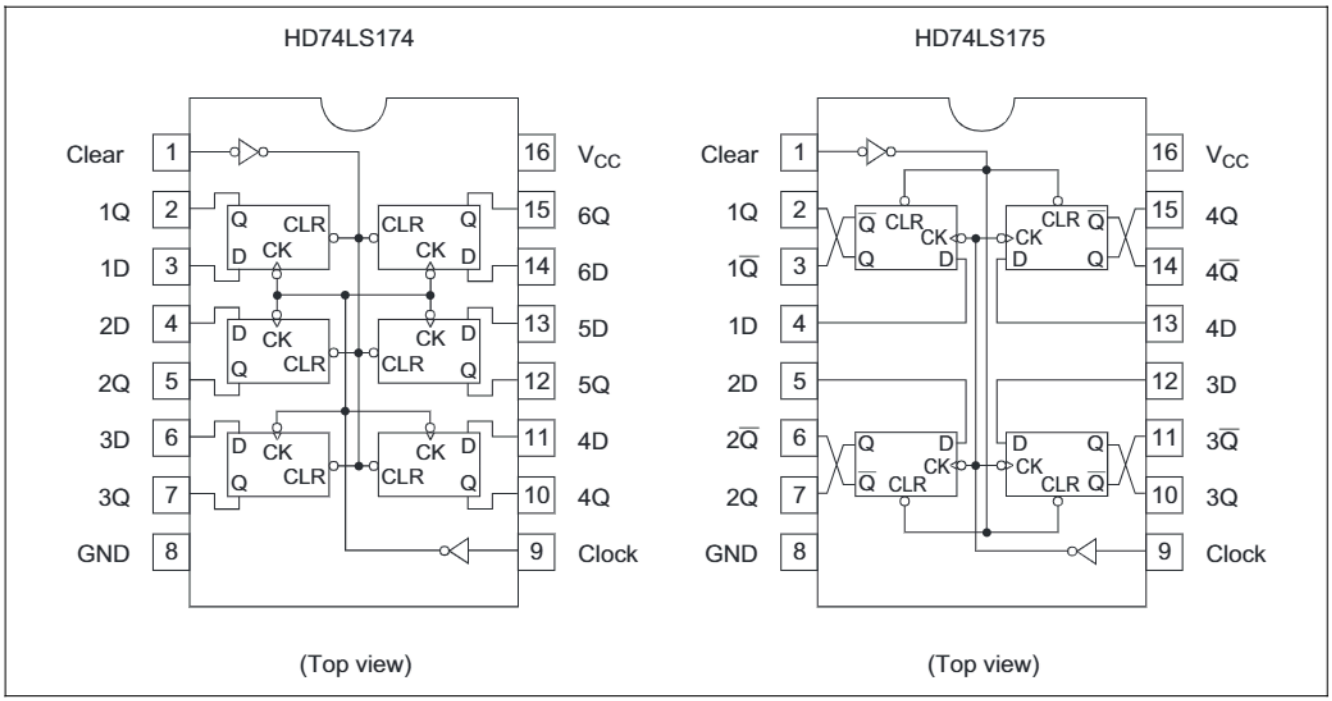

Function Table

Inputs			Outputs	
Clear	**Clock**	**D**	**Q**	**$\overline{Q}$**
L	X	X	L	H
H	↑	H	H	L
H	↑	L	L	H
H	L	X	Q_0	$\overline{Q}_0$

Notes: 1. H; high level, L; low level, X; irrelevant
2. ↑; transition from low to high level
3. Q_0; the level of Q before the indicated steady-state input conditions were established.
4. $\overline{Q}$ is applied to HD74LS175 only.

Block Diagram

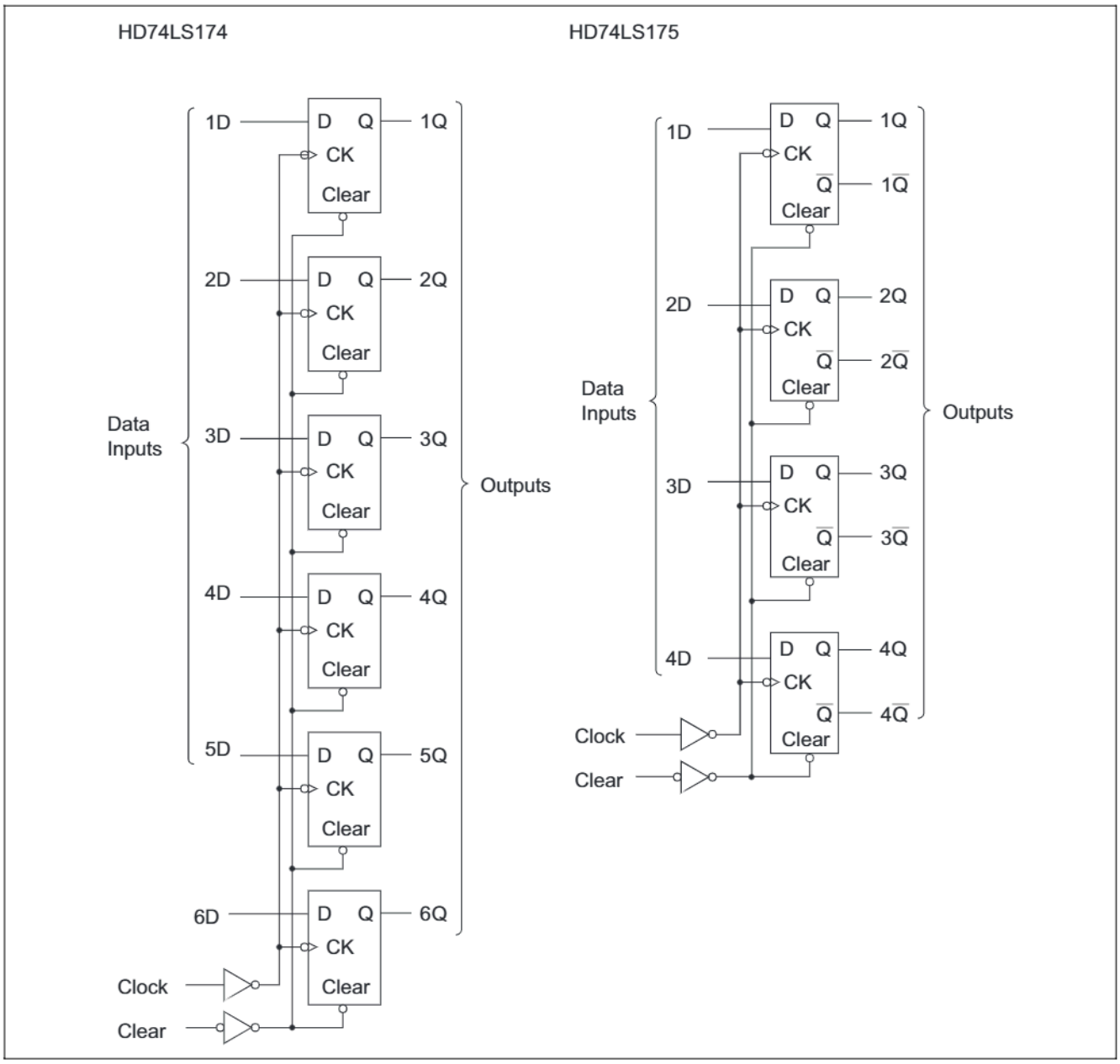

Absolute Maximum Ratings

Item	Symbol	Ratings	Unit
Supply voltage	V_{CC}	7	V
Input voltage	V_{IN}	7	V
Power dissipation	P_T	400	mW
Storage temperature	Tstg	–65 to +150	°C

Note: Voltage value, unless otherwise noted, are with respect to network ground terminal.

Recommended Operating Conditions

• **HD74LS174**

Item		Symbol	Min	Typ	Max	Unit
Supply voltage		V_{CC}	4.75	5.00	5.25	V
Output current		I_{OH}	—	—	–400	∝A
		I_{OL}	—	—	8	mA
Operating temperature		T_{opr}	–20	25	75	°C
Clock frequency		f_{clock}	0	—	30	MHz
Clock pulse width		$t_{w\ (CK)}$	20	—	—	ns
Clear pulse width		$t_{w\ (CLR)}$	20	—	—	ns
Setup time	Data input	$t_{su\ (data)}$	20	—	—	ns
	Clear inactive-state	$t_{su\ (CLR)}$	25	—	—	ns
Data hold time		$t_{h\ (data)}$	5	—	—	ns

• **HD74LS175**

Item		Symbol	Min	Typ	Max	Unit
Supply voltage		V_{CC}	4.75	5.00	5.25	V
Output current		I_{OH}	—	—	–400	∝A
		I_{OL}	—	—	8	mA
Operating temperature		T_{opr}	–20	25	75	°C
Clock frequency		f_{clock}	0	—	30	MHz
Clock pulse width		$t_{w\ (CK)}$	20	—	—	ns
Clear pulse width		$t_{w\ (CLR)}$	20	—	—	ns
Setup time	Data input	$t_{su\ (data)}$	20	—	—	ns
	Clear inactive-state	$t_{su\ (CLR)}$	25	—	—	ns
Data hold time		$t_{h\ (data)}$	5	—	—	ns

Electrical Characteristics

(Ta = –20 to +75 °C)

Item	Symbol	min.	typ.*	max.	Unit	Condition	
Input voltage	V_{IH}	2.0	—	—	V		
	V_{IL}	—	—	0.8	V		
Output voltage	V_{OH}	2.7	—	—	V	V_{CC} = 4.75 V, V_{IH} = 2 V, V_{IL} = 0.8 V, I_{OH} = –400 ∝A	
	V_{OL}	—	—	0.5	V	I_{OL} = 8 mA	V_{CC} = 4.75 V, V_{IH} = 2 V, V_{IL} = 0.8 V
		—	—	0.4		I_{OL} = 4 mA	
Input current	I_{IH}	—	—	20	∝A	V_{CC} = 5.25 V, V_I = 2.7 V	
	I_{IL}	—	—	–0.4	mA	V_{CC} = 5.25 V, V_I = 0.4 V	
	I_I	—	—	0.1	mA	V_{CC} = 5.25 V, V_I = 7 V	
Short-circuit output current	I_{OS}	–20	—	–100	mA	V_{CC} = 5.25 V	
Supply current**	I_{CC}	—	16	26	mA	HD74LS174	V_{CC} = 5.25 V
		—	11	18		HD74LS175	
Input clamp voltage	V_{IK}	—	—	–1.5	V	V_{CC} = 4.75 V, I_{IN} = –18 mA	

Notes: * V_{CC} = 5 V, Ta = 25°C

** With all outputs open and 4.5 V applied to all data and cleat inputs, I_{CC} is measured after a momentary grounded, then 4.5 V, is applied to clock.

RENESAS

Switching Characteristics

• **HD74LS174**

(V_{CC} = 5 V, Ta = 25°C)

Item	Symbol	Inputs	Outputs	min.	typ.	max.	Unit	Condition
Maximum clock frequency	f_{max}	Clock	Q	30	40	—	MHz	C_L = 15 pF, R_L = 2 kΩ
Propagation delay time	t_{PHL}	Clear	Q	—	23	35	ns	
	t_{PLH}	Clock	Q	—	20	30		
	t_{PHL}	Clock	Q	—	21	30		

• **HD74LS175**

(V_{CC} = 5 V, Ta = 25°C)

Item	Symbol	Inputs	Outputs	min.	typ.	max.	Unit	Condition
Maximum clock frequency	f_{max}	Clock	Q, $\overline{Q}$	30	40	—	MHz	C_L = 15 pF, R_L = 2 kΩ
Propagation delay time	t_{PLH}	Clear	$\overline{Q}$	—	16	25	ns	
	t_{PHL}		Q	—	20	30		
	t_{PLH}	Clock	Q, $\overline{Q}$	—	13	25		
	t_{PHL}	Clock	Q, $\overline{Q}$	—	16	25		

Testing Method

Test Circuit

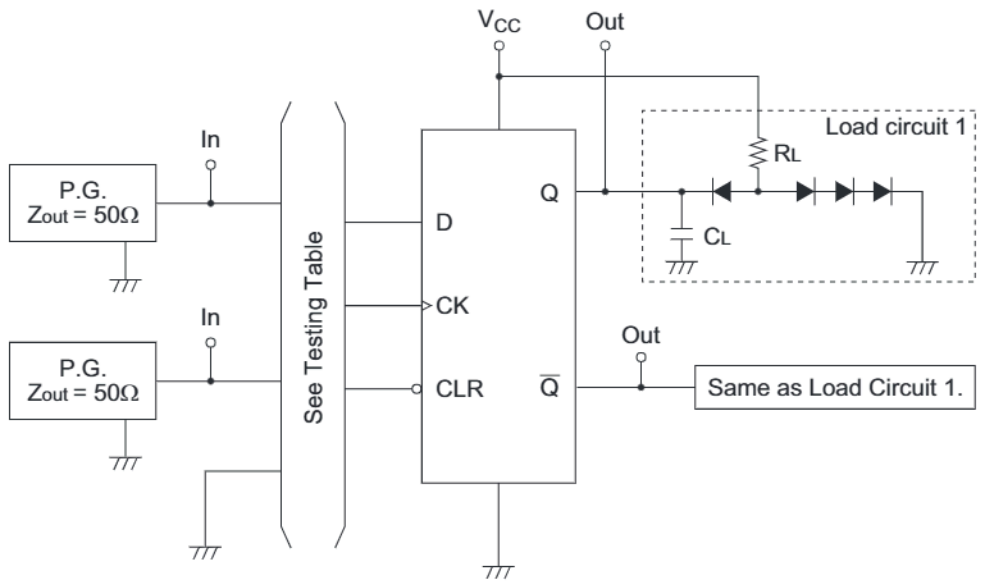

Notes:
1. Test is put into the each flip-flop.
2. C_L includes probe and jig capacitance.
3. All diodes are 1S2074(H).

Testing Table

Item	From input to output	Inputs			Outputs	
		CLR	CK	D	Q	$\overline{Q}$
f_{max}	CK→Q, $\overline{Q}$*	4.5 V	IN	IN	OUT	OUT
t_{PLH}	CK→Q, $\overline{Q}$*	4.5 V	IN	IN		
t_{PHL}	CLR→Q, $\overline{Q}$*	IN	IN	4.5 V		

Note: *. HD74LS175 only

Waveform

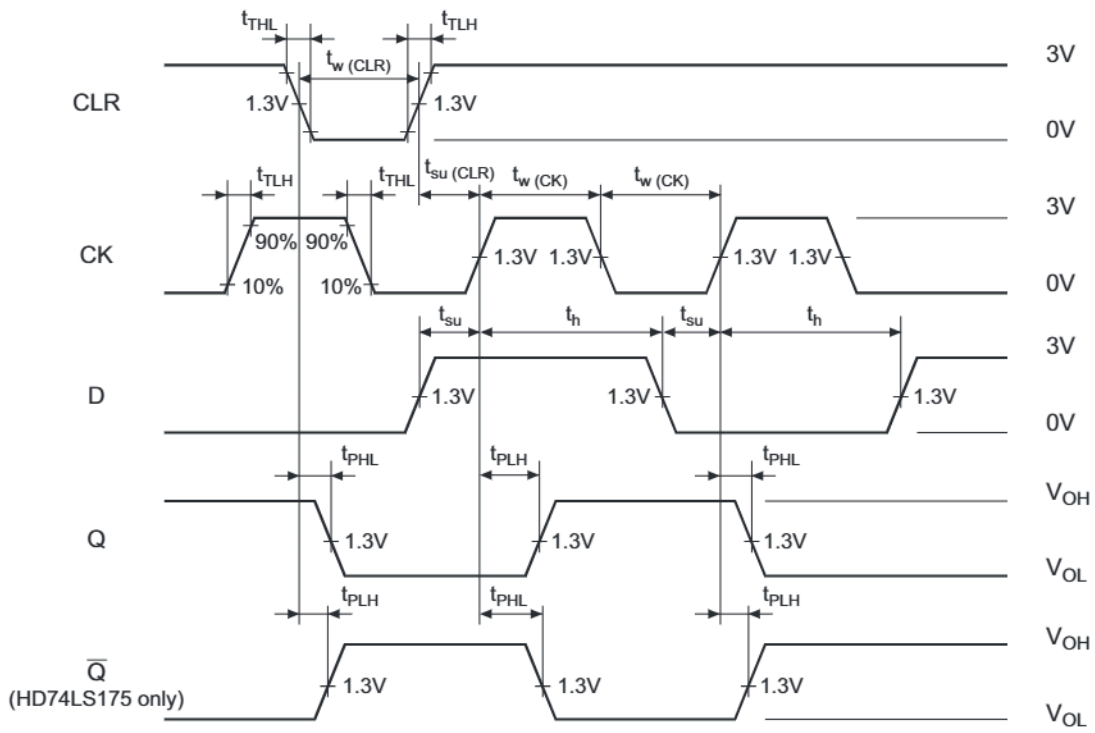

Note: Input pulse; $t_{TLH} \leq 15$ ns, $t_{THL} \leq 6$ ns, PRR = 1 MHz, and: for f_{max}, $t_{TLH} = t_{THL} \leq 2.5$ ns.

Package Dimensions

JEITA Package Code	RENESAS Code	Previous Code	MASS[Typ.]
P-DIP16-6.3x19.2-2.54	PRDP0016AE-B	DP-16FV	1.05g

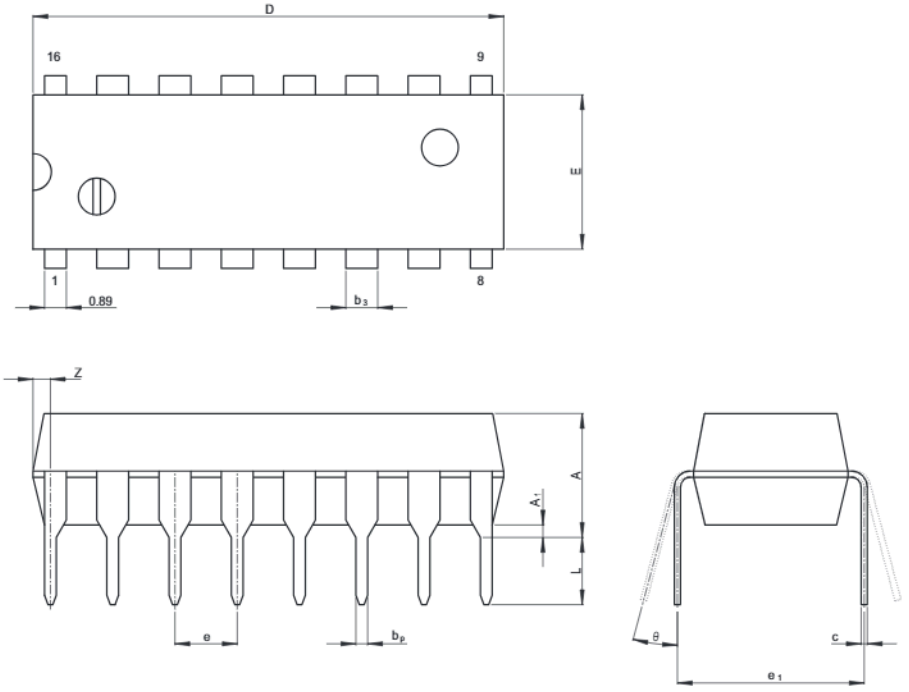

(Ni/Pd/Au plating)

Reference Symbol	Dimension in Millimeters		
	Min	Nom	Max
e_1	—	7.62	—
D	—	19.2	20.32
E	—	6.3	7.4
A	—	—	5.06
A_1	0.51	—	—
b_p	0.40	0.48	0.56
b_3	—	1.30	—
c	0.19	0.25	0.31
θ	0°	—	15°
e	2.29	2.54	2.79
Z	—	—	1.12
L	2.54	—	—

JEITA Package Code	RENESAS Code	Previous Code	MASS[Typ.]
P-SOP16-5.5x10.06-1.27	PRSP0016DH-B	FP-16DAV	0.24g

NOTE)
1. DIMENSIONS"*1 (Nom)"AND"*2" DO NOT INCLUDE MOLD FLASH.
2. DIMENSION"*3"DOES NOT INCLUDE TRIM OFFSET.

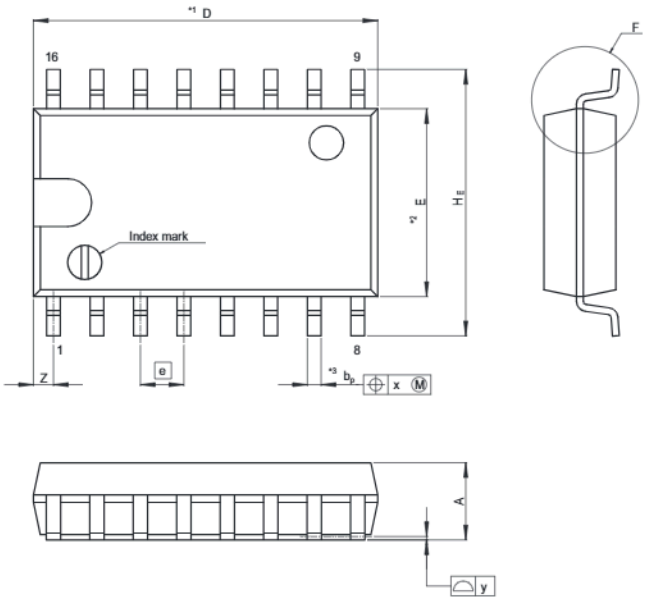

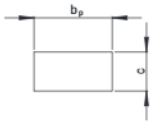

Terminal cross section
(Ni/Pd/Au plating)

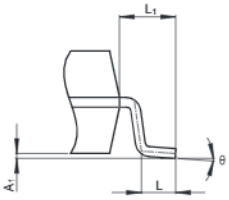

Detail F

Reference Symbol	Dimension in Millimeters		
	Min	Nom	Max
D	—	10.06	10.5
E	—	5.50	—
A_2	—	—	—
A_1	0.00	0.10	0.20
A	—	—	2.20
b_p	0.34	0.40	0.46
b_1	—	—	—
c	0.15	0.20	0.25
c_1	—	—	—
θ	0°	—	8°
H_E	7.50	7.80	8.00
e	—	1.27	—
x	—	—	0.12
y	—	—	0.15
Z	—	—	0.80
L	0.50	0.70	0.90
L_1	—	1.15	—

JEITA Package Code	RENESAS Code	Previous Code	MASS[Typ.]
P-SOP16-3.95x9.9-1.27	PRSP0016DG-A	FP-16DNV	0.15g

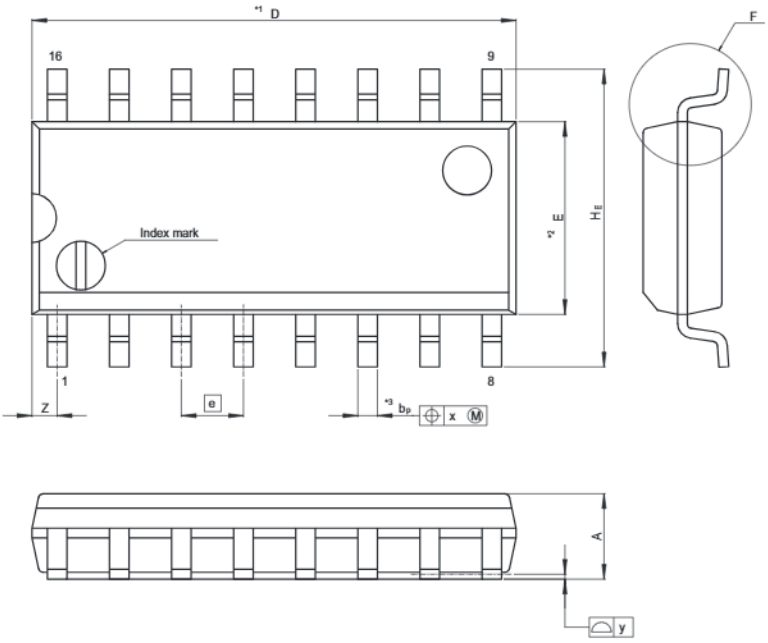

NOTE)
1. DIMENSIONS"*1 (Nom)"AND"*2" DO NOT INCLUDE MOLD FLASH.
2. DIMENSION"*3"DOES NOT INCLUDE TRIM OFFSET.

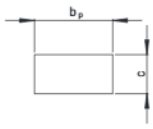

Terminal cross section
(Ni/Pd/Au plating)

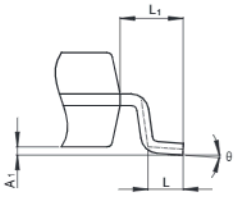

Detail F

Reference Symbol	Dimension in Millimeters		
	Min	Nom	Max
D	—	9.90	10.30
E	—	3.95	—
A_2	—	—	—
A_1	0.10	0.14	0.25
A	—	—	1.75
b_p	0.34	0.40	0.46
b_1	—	—	—
c	0.15	0.20	0.25
c_1	—	—	—
θ	0°	—	8°
H_E	5.80	6.10	6.20
e	—	1.27	—
x	—	—	0.25
y	—	—	0.15
Z	—	—	0.635
L	0.40	0.60	1.27
L_1	—	1.08	—

Renesas Technology Corp. Sales Strategic Planning Div. Nippon Bldg., 2-6-2, Ohte-machi, Chiyoda-ku, Tokyo 100-0004, Japan

Keep safety first in your circuit designs!
1. Renesas Technology Corp. puts the maximum effort into making semiconductor products better and more reliable, but there is always the possibility that trouble may occur with them. Trouble with semiconductors may lead to personal injury, fire or property damage.
Remember to give due consideration to safety when making your circuit designs, with appropriate measures such as (i) placement of substitutive, auxiliary circuits, (ii) use of nonflammable material or (iii) prevention against any malfunction or mishap.

Notes regarding these materials
1. These materials are intended as a reference to assist our customers in the selection of the Renesas Technology Corp. product best suited to the customer's application; they do not convey any license under any intellectual property rights, or any other rights, belonging to Renesas Technology Corp. or a third party.
2. Renesas Technology Corp. assumes no responsibility for any damage, or infringement of any third-party's rights, originating in the use of any product data, diagrams, charts, programs, algorithms, or circuit application examples contained in these materials.
3. All information contained in these materials, including product data, diagrams, charts, programs and algorithms represents information on products at the time of publication of these materials, and are subject to change by Renesas Technology Corp. without notice due to product improvements or other reasons. It is therefore recommended that customers contact Renesas Technology Corp. or an authorized Renesas Technology Corp. product distributor for the latest product information before purchasing a product listed herein.
The information described here may contain technical inaccuracies or typographical errors.
Renesas Technology Corp. assumes no responsibility for any damage, liability, or other loss rising from these inaccuracies or errors.
Please also pay attention to information published by Renesas Technology Corp. by various means, including the Renesas Technology Corp. Semiconductor home page (http://www.renesas.com).
4. When using any or all of the information contained in these materials, including product data, diagrams, charts, programs, and algorithms, please be sure to evaluate all information as a total system before making a final decision on the applicability of the information and products. Renesas Technology Corp. assumes no responsibility for any damage, liability or other loss resulting from the information contained herein.
5. Renesas Technology Corp. semiconductors are not designed or manufactured for use in a device or system that is used under circumstances in which human life is potentially at stake. Please contact Renesas Technology Corp. or an authorized Renesas Technology Corp. product distributor when considering the use of a product contained herein for any specific purposes, such as apparatus or systems for transportation, vehicular, medical, aerospace, nuclear, or undersea repeater use.
6. The prior written approval of Renesas Technology Corp. is necessary to reprint or reproduce in whole or in part these materials.
7. If these products or technologies are subject to the Japanese export control restrictions, they must be exported under a license from the Japanese government and cannot be imported into a country other than the approved destination.
Any diversion or reexport contrary to the export control laws and regulations of Japan and/or the country of destination is prohibited.
8. Please contact Renesas Technology Corp. for further details on these materials or the products contained therein.

RENESAS SALES OFFICES

http://www.renesas.com

Refer to "**http://www.renesas.com/en/network**" for the latest and detailed information.

Renesas Technology America, Inc.
450 Holger Way, San Jose, CA 95134-1368, U.S.A
Tel: <1> (408) 382-7500, Fax: <1> (408) 382-7501

Renesas Technology Europe Limited
Dukes Meadow, Millboard Road, Bourne End, Buckinghamshire, SL8 5FH, U.K.
Tel: <44> (1628) 585-100, Fax: <44> (1628) 585-900

Renesas Technology Hong Kong Ltd.
7th Floor, North Tower, World Finance Centre, Harbour City, 1 Canton Road, Tsimshatsui, Kowloon, Hong Kong
Tel: <852> 2265-6688, Fax: <852> 2730-6071

Renesas Technology Taiwan Co., Ltd.
10th Floor, No.99, Fushing North Road, Taipei, Taiwan
Tel: <886> (2) 2715-2888, Fax: <886> (2) 2713-2999

Renesas Technology (Shanghai) Co., Ltd.
Unit2607 Ruijing Building, No.205 Maoming Road (S), Shanghai 200020, China
Tel: <86> (21) 6472-1001, Fax: <86> (21) 6415-2952

Renesas Technology Singapore Pte. Ltd.
1 Harbour Front Avenue, #06-10, Keppel Bay Tower, Singapore 098632
Tel: <65> 6213-0200, Fax: <65> 6278-8001

Renesas Technology Korea Co., Ltd.
Kukje Center Bldg. 18th Fl., 191, 2-ka, Hangang-ro, Yongsan-ku, Seoul 140-702, Korea
Tel: <82> 2-796-3115, Fax: <82> 2-796-2145

Renesas Technology Malaysia Sdn. Bhd.
Unit 906, Block B, Menara Amcorp, Amcorp Trade Centre, No.18, Jalan Persiaran Barat, 46050 Petaling Jaya, Selangor Darul Ehsan, Malaysia
Tel: <603> 7955-9390, Fax: <603> 7955-9510

© 2005. Renesas Technology Corp., All rights reserved. Printed in Japan.

Colophon .3.0